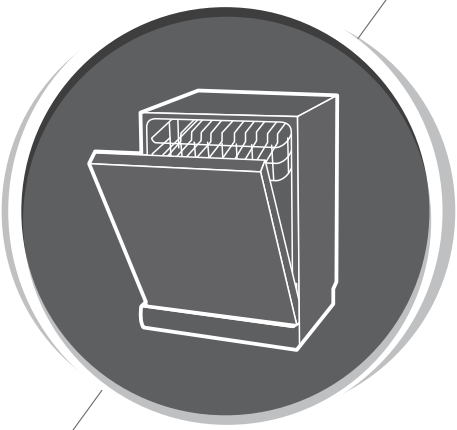

Dishwasher
Instruction Manual

PART I : Generic Version

DW6083PRV
L6SJ5JG1XE.50

Please read this manual carefully before using the dishwasher
Keep this manual for future reference.

CONTENTS

01 3 **SAFETY INFORMATION**

02 8 **PRODUCT OVERVIEW**

03
9 **USING YOUR DISHWASHER**
9 Loading The Salt Into The Softener
11 Basket Used Tips

04
13 **MAINTENANCE AND CLEANING**
13 External Care
13 Internal Care
16 Caring For The Dishwasher

05
17 **INSTALLATION INSTRUCTION**
17 About Power Connection
18 Water Supply And Drain
19 Connection Of Drain Hoses
20 Position The Appliance
20 Free Standing Installation
21 Built-In Installation(for the integrated model)

06 26 **TROUBLESHOOTING TIPS**

07
30 **LOADING THE BASKETS**
32 Cutlery Rack Used Tips

NOTE:

- Reviewing the section on troubleshooting Tips will help you solve some common problems by yourself.
- If you cannot solve the problems by yourself, please ask for help from a professional technician.
- The manufacturer, following a policy of constant development and updating of the product, may make modifications without giving prior notice.
- If lost or out-of-date, you can receive a new user manual from the manufacturer or responsible vendor.

SAFETY INFORMATION

⚠ WARNING

When using your dishwasher, follow the precautions listed below:

- Installation and repair can only be carried out by a qualified technician
- This appliance is intended to be used in household and similar applications such as:
  -staff kitchen areas in shops, offices and other working environments;
  -farm houses;
  -by clients in hotels, motels and other residential type environments;
  -bed and breakfast type environments.
- This appliance can be used by children aged from 8 years and above and persons with reduced physical, sensory or mental capabilities or lack of experience and knowledge if they have been given supervision or instruction concerning use of the appliance in a safe way and understand the hazards involved.
- Children shall not play with the appliance. Cleaning and user maintenance shall not be done by children without supervision. (For EN60335-1)
  This appliance is not intended for use by persons (including children) with reduced physical, sensory or

mental capabilities, or lack of experience and knowledge, unless they have been given supervision or instruction concerning use of the appliance by a person responsible for their safety. (For IEC60335-1)

- Packaging material could be dangerous for children!
- This appliance is for indoor household use only.
  To protect against the risk of electrical shock, do not immerse the unit, cord or plug in water or other liquid.
- Please unplug before cleaning and performing maintenance on the appliance.
- Use a soft cloth moistened with mild soap, and then use a dry cloth to wipe it again.

Earthing Instructions

- This appliance must be earthed. In the event of a malfunction or breakdown, earthing will reduce the risk of an electric shock by providing a path of least resistance of electric current. This appliance is equipped with an earthing conductor plug.
- The plug must be plugged into an appropriate outlet that is installed and earthed in accordance with all local codes and ordinances.
- Improper connection of the equipment-earthing conductor can result in the risk of an electric shock.
- Check with a qualified electrician or service representative if you are in doubt whether the appliance is properly grounded.

- Do not modify the plug provided with the appliance; If it does not fit the outlet.
- Have a proper outlet installed by a qualified electrician.
- Do not abuse, sit on, or stand on the door or dish rack of the dishwasher.
- Do not operate your dishwasher unless all enclosure panels are properly in place.
- Open the door very carefully if the dishwasher is operating, there is a risk of water squirting out.
- Do not place any heavy objects on or stand on the door when it is open. The appliance could tip forward.
- When loading items to be washed:
  1) Locate sharp items so that they are not likely to damage the door seal;
  2) Warning: Knives and other utensils with sharp points must be loaded in the basket with their points facing down or placed in a horizontal position.
- Some dishwasher detergents are strongly alkaline. They can be extremely dangerous if swallowed. Avoid contact with the skin and eyes and keep children away from the dishwasher when the door is open.
- Check that the detergent powder is empty after completion of the wash cycle.

- Do not wash plastic items unless they are marked “dishwasher safe” or the equivalent.
- For unmarked plastic items not so marked, check the manufacturer's recommendations.
- Use only detergent and rinse agents recommended for use in an automatic dishwasher.
- Never use soap, laundry detergent, or hand washing detergent in your dishwasher.
- The door should not be left open, since this could increase the risk of tripping.
  If the supply cord is damaged, it must be replaced by the manufacturer or its service agent or a similarly qualified person in order to avoid a hazard.
- During installation, the power supply must not be excessively or dangerously bent or flattened.
- Do not tamper with controls.
- The appliance needs to be connected to the main water valve using new hose sets. Old sets should not be reused.
- To save energy, in stand by mode, the appliance will switch off automatically while there is no any operation in 15 minutes.
- The maximum number of place settings to be washed is 14.
- The maximum permissible inlet water pressure is 1MPa.
- The minimum permissible inlet water pressure is 0.04MPa.

Disposal

- For disposing of package and the appliance please go to a recycling center. Therefore cut off the power supply cable and make the door closing device unusable.
- Cardboard packaging is manufactured from recycled paper and should be disposed in the waste paper collection for recycling.
- By ensuring this product is disposed of correctly, you will help prevent potential negative consequences for the environment and human health, which could otherwise be caused by inappropriate waste handling of this product.
- For more detailed information about recycling of this product, please contact your local city office and your household waste disposal service.
- **DISPOSAL: Do not dispose this product as unsorted municipal waste. Collection of such waste separately for special treatment is necessary.**

PRODUCT OVERVIEW

❗ IMPORTANT:

To get the best performance from your dishwasher, read all operating instructions before using it for the first time.

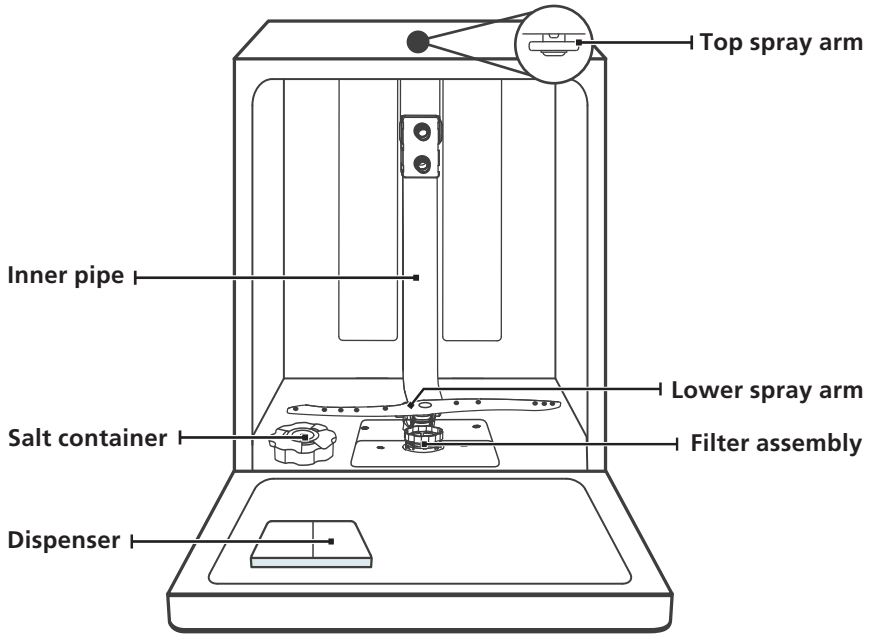

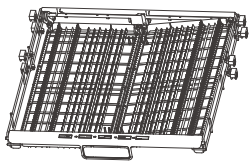

Cutlery rack

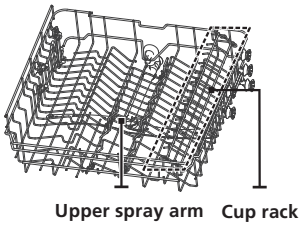

Upper basket

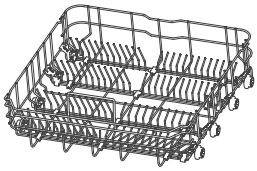

Lower basket

NOTE:

Pictures are only for reference, different models may be different. Please prevail in kind.

USING YOUR DISHWASHER

Before using your dishwasher :

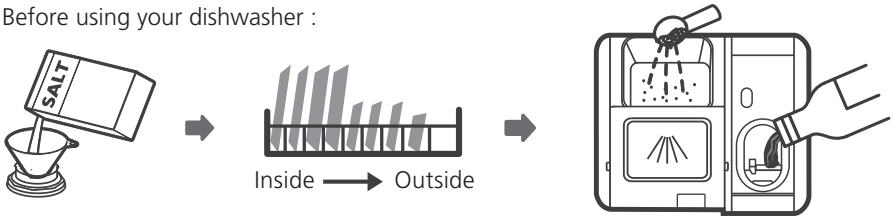

1. Set the water softener
2. Loading the salt Into the softener
3. Loading the basket
4. Fill the dispenser

Please check the section 1 "Water Softener" of PART II : Special Version, If you need to set the water softener .

Loading The Salt Into The Softener

NOTE:

If your model does not have any water softener, you may skip this section.

Always use salt intended for dishwasher use.

The salt container is located beneath the lower basket and should be filled as explained in the following:

⚠ WARNING

- **Only use salt specifically designed for dishwashers use!**
  Every other type of salt not specifically designed for dishwasher use, especially table salt, will damage the water softener. In case of damages caused by the use of unsuitable salt the manufacturer does not give any warranty nor is liable for any damages caused.
- **Only fill with salt before running a cycle.**
  This will prevent any grains of salt or salty water, which may have been spilled, remaining on the bottom of the machine for any period of time, which may cause corrosion.

Please follow the steps below for adding dishwasher salt:

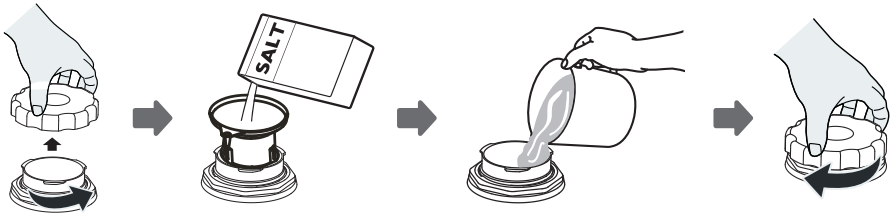

1. Remove the lower basket and unscrew the reservoir cap.
2. Place the end of the funnel (if supplied) into the hole and pour in about 1.5kg of dishwasher salt.
3. Fill the salt container to its maximum limit with water, It is normal for a small amount of water to come out of the salt container.
4. After filling the container, screw back the cap tightly.
5. The salt warning light will stop being after the salt container has been filled with salt.
6. Immediately after filling the salt into the salt container, a washing program should be started (We suggest to use a short program). Otherwise the filter system, pump or other important parts of the machine may be damaged by salty water. This is out of warranty.

NOTE:

- The salt container must only be refilled when the salt warning light ( ) in the control panel comes on. Depending on how well the salt dissolves, the salt warning light may still be on even though the salt container is filled.
  If there is no salt warning light in the control panel (for some Models), you can estimate when to fill the salt into the softener by the cycles that the dishwasher has run.
- If salt has spilled, run a soak or quick program to remove it.

Basket Used Tips

Adjusting the upper basket

Type 1:

The height of the upper basket can be easily adjusted to accommodate taller dishes in either the upper or lower basket.
To adjust the height of the upper rack, follow these steps:

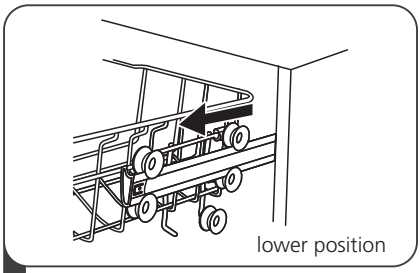

1 Pull out the upper basket.

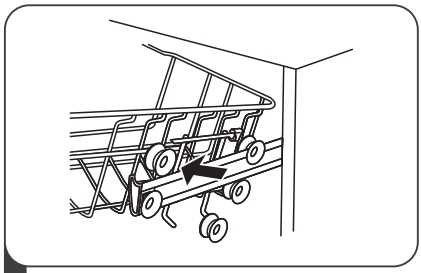

2 Remove the upper basket.

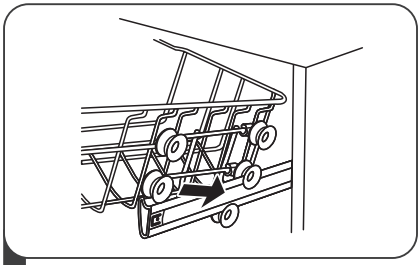

3 Re-attach the upper basket to upper or lower rollers.

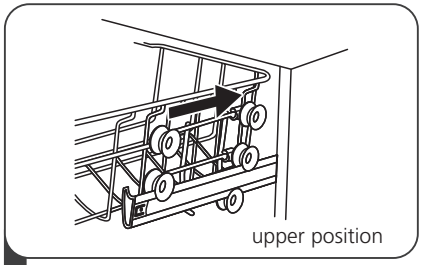

4 Push in the upper basket.

Type 2:

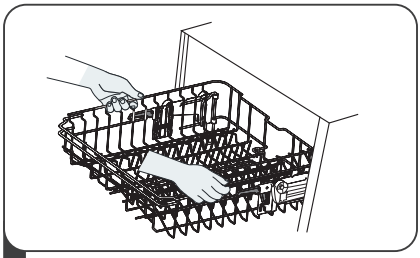

1 To raise the upper basket, just lift the upper basket at the center of each side until the basket locks into place in the upper position. It is not necessary to lift the adjuster handle.

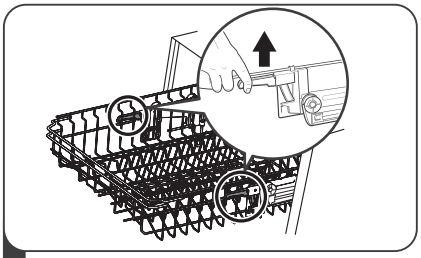

2 To lower the upper basket, lift the adjust handles on each side to release the basket and lower it to the lower position.

Folding back the cup shelves

To make room for taller items in the upper basket, raise the cup rack upwards. You can then lean the tall glasses against it. You can also remove it when it is not required for use.

Folding back the rack shelves

The spikes of the lower basket are used for holding plates and a platter. They can be lowered to make more room for large items.

raise upwards

fold backwards

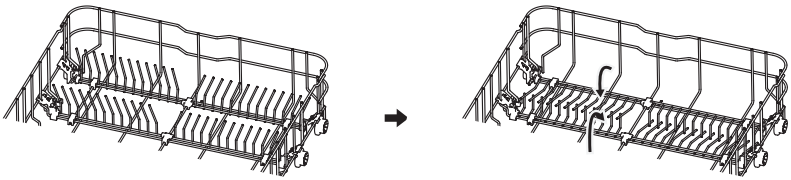

MAINTENANCE AND CLEANING

External Care

The door and the door seal

Clean the door seals regularly with a soft damp cloth to remove food deposits. When the dishwasher is being loaded, food and drink residues may drip onto the sides of the dishwasher door. These surfaces are outside the wash cabinet and are not accessed by water from the spray arms. Any deposits should be wiped off before the door is closed.

The control panel

If cleaning is required, the control panel should be wiped with a soft damp cloth only.

⚠ WARNING

- To avoid penetration of water into the door lock and electrical components, do not use a spray cleaner of any kind.
- Never use abrasive cleaners or scouring pads on the outer surfaces because they may scratch the finish. Some paper towels may also scratch or leave marks on the surface.

Internal Care

Filtering system

The filtering system in the base of the wash cabinet retains coarse debris from the washing cycle. The collected coarse debris may cause the filters to clog. Check the condition of the filters regularly and clean them if necessary under running water. Follow the steps below to clean the filters in the wash cabinet.

NOTE:

Pictures are only for reference, different models of the filtering system and spray arms may be different.

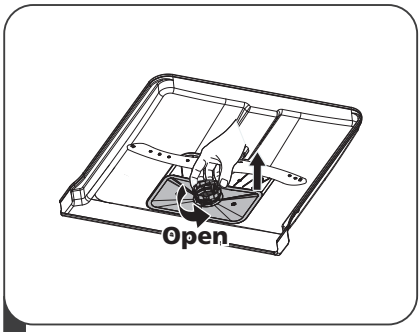

1 Hold the coarse filter and rotate it anticlockwise to unlock the filter. Lift the filter upwards and out of the dishwasher.

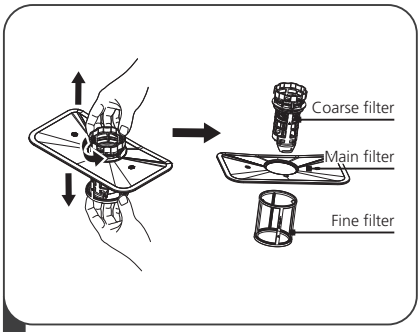

2 The fine filter can be pulled off the bottom of the filter assembly.
The coarse filter can be detached from the main filter by gently squeezing the tabs at the top and pulling it away.

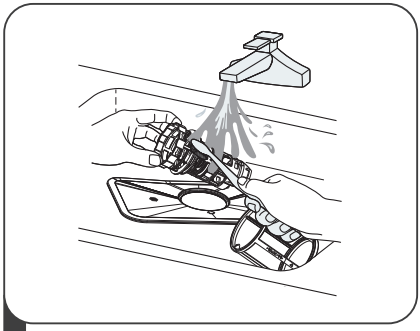

3 Larger food remnants can be cleaned by rinsing the filter under running water.
For a more thorough clean, use a soft cleaning brush.

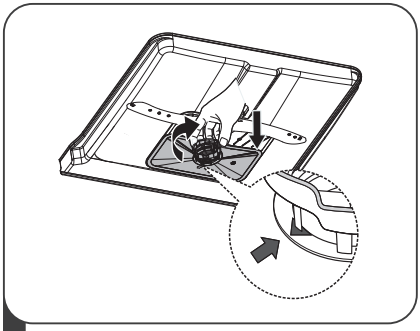

4 Reassemble the filters in the reverse order of the disassembly, replace the filter insert, and rotate clockwise to the close arrow.

⚠ WARNING

- Do not over tighten the filters. Put the filters back in sequence securely, otherwise coarse debris could get into the system and cause a blockage.
- Never use the dishwasher without filters in place. Improper replacement of the filter may reduce the performance level of the appliance and damage dishes and utensils.

Spray arms

It is necessary to clean the spray arms regularly for hard water chemicals will clog the spray arm jets and bearings.

To clean the spray arms, follow the instructions below:

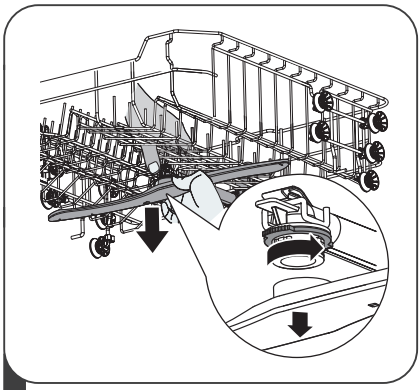

1 To remove the upper spray arm, hold the nut in the center still and rotate the spray arm counterclockwise to remove it.

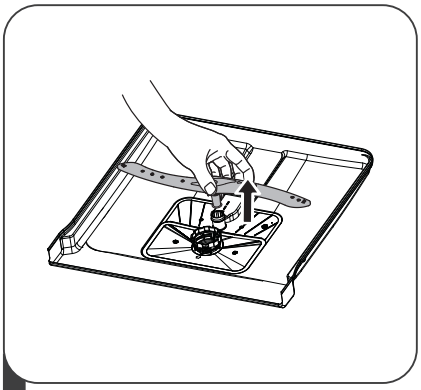

2 To remove the lower spray arm, pull out the spray arm upward.

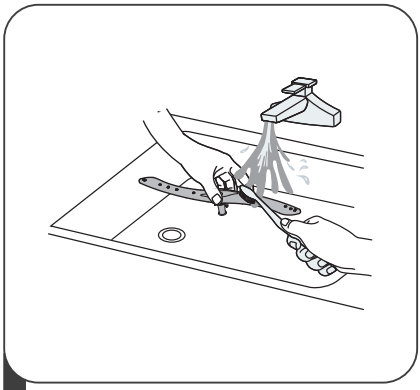

3 Wash the arms in soapy and warm water and use a soft brush to clean the jets. Replace them after rinsing them thoroughly.

Caring For The Dishwasher

Frost precaution

Please take frost protection measures on the dishwasher in winter. Every time after washing cycles, please operate as follows:

1. Cut off the electrical power to the dishwasher at the supply source.
2. Turn off the water supply and disconnect the water inlet pipe from the water valve.
3. Drain the water from the inlet pipe and water valve. (Use a pan to gather the water)
4. Reconnect the water inlet pipe to the water valve.
5. Remove the filter at the bottom of the tub and use a sponge to soak up water in the sump.

After every wash

After every wash, turn off the water supply to the appliance and leave the door slightly open so that moisture and odors are not trapped inside.

Remove the plug

Before cleaning or performing maintenance, always remove the plug from the socket.

No solvents or abrasive cleaning

To clean the exterior and rubber parts of the dishwasher, do not use solvents or abrasive cleaning products. Only use a cloth with warm soapy water.
To remove spots or stains from the surface of the interior, use a cloth dampened with water an a little vinegar, or a cleaning product made specifically for dishwashers.

When not in use for a longtime

It is recommend that you run a wash cycle with the dishwasher empty and then remove the plug from the socket, turn off the water supply and leave the door of the appliance slightly open. This will help the door seals to last longer and prevent odors from forming within the appliance.

Moving the appliance

If the appliance must be moved, try to keep it in the vertical position. If absolutely necessary, it can be positioned on its back.

Seals

One of the factors that cause odours to form in the dishwasher is food that remains trapped in the seals. Periodic cleaning with a damp sponge will prevent this from occurring.

INSTALLATION INSTRUCTION

⚠WARNING

Electrical Shock Hazard
Disconnect electrical power before installing dishwasher.
Failure to do so could result in death or electrical shock.

⚠ Attention

The installation of the pipes and electrical equipments should be done by professionals.

About Power Connection

⚠WARNING

For personal safety:

- Do not use an extension cord or an adapter plug with this appliance.
- Do not, under any circumstances, cut or remove the earthing connection from the power cord.

Electrical requirements

Please look at the rating label to know the rating voltage and connect the dishwasher to the appropriate power supply. Use the required fuse 10A/13A/16A, time delay fuse or circuit breaker recommended and provide separate circuit serving only this appliance.

Electrical connection

Ensure the voltage and frequency of the power being corresponds to those on the rating plate. Only insert the plug into an electrical socket which is earthed properly. If the electrical socket to which the appliance must be connected is not appropriate for the plug, replace the socket, rather than using a adaptors or the like as they could cause overheating and burns.

⚠ Ensure that proper earthing exists before use

Water Supply And Drain

Cold water connection

Connect the cold water supply hose to a threaded 3/4(inch) connector and make sure that it is fastened tightly in place.
If the water pipes are new or have not been used for an extended period of time, let the water run to make sure that the water is clear. This precaution is needed to avoid the risk of the water inlet to be blocked and damage the appliance.

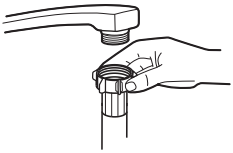

ordinary supply hose

safety supply hose

About the safety supply hose

The safety supply hose consists of the double walls. The hose's system guarantees its intervention by blocking the flow of water in case of the supply hose breaking and when the air space between the supply hose itself and the outer corrugated hose is full of water.

⚠WARNING

A hose that attaches to a sink spray can burst if it is installed on the same water line as the dishwasher. If your sink has one, it is recommended that the hose be disconnected and the hole plugged.

How to connect the safety supply hose

1. Pull The safety supply hoses completely out from storage compartment located at rear of dishwasher.
2. Tighter the screws of the safety supply hose to the faucet with thread 3/4inch.
3. Turn water fully on before starting the dishwasher.

How to disconnect the safety supply hose

1. Turn off the water.
2. Unscrew the safety supply hose from the faucet.

Connection Of Drain Hoses

Insert the drain hose into a drain pipe with a minimum diameter of 4 cm, or let it run into the sink, making sure to avoid bending or crimping it. The height of drain pipe must be less than 1000mm. The free end of the hose must not be immersed in water to avoid the back flow of it.

⚠ Please securely fix the drain hose in either position A or position B

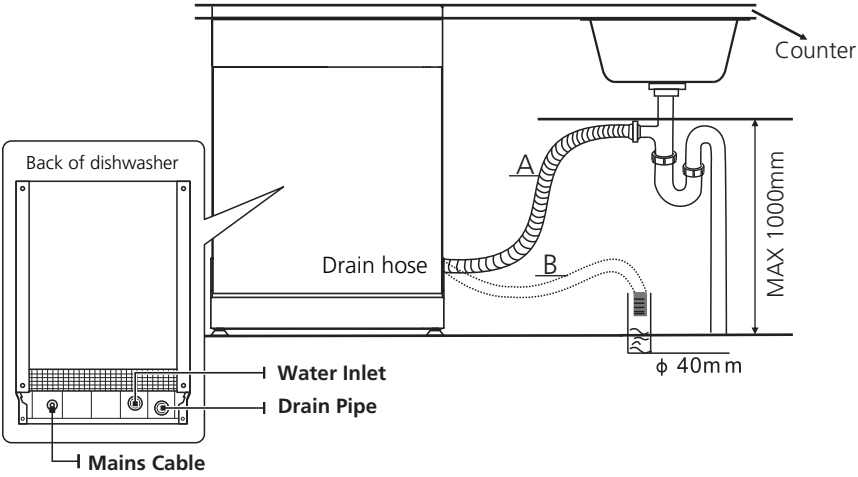

How to drain excess water from hoses

If the sink is 1000 higher from the floor, the excess water in hoses cannot be drained directly into the sink. It will be necessary to drain excess water from hoses into a bowl or suitable container that is held outside and lower than the sink.

Water outlet

Connect the water drain hose. The drain hose must be correctly fitted to avoid water leaks. Ensure that the water drain hose is not kinked or squashed.

Extension hose

If you need a drain hose extension, make sure to use a similar drain hose.
It must be no longer than 4 meters; otherwise the cleaning effect of the dishwasher could be reduced.

Syphon connection

The waste connection must be at a height less than 100 cm (maximum) from the bottom of the dish. The water drain hose should be fixed .

Position The Appliance

Position the appliance in the desired location. The back should rest against the wall behind it, and the sides, along the adjacent cabinets or walls. The dishwasher is equipped with water supply and drain hoses that can be positioned either to the right or the left sides to facilitate proper installation.

Levelling the appliance

Once the appliance is positioned for levelling, the height of the dishwasher may be altered via adjustment of the screwing level of the feet.
In any case,the appliance should not be inclined more than 2° .

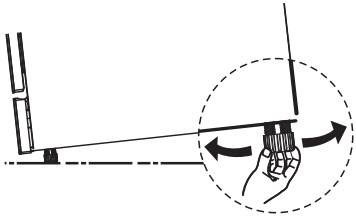

NOTE:

Only apply to the free standing dishwasher.

Free Standing Installation

Fitting between existing carbinets

The height of the dishwasher, 845 mm, has been designed in order to allow the machine to be fitted between existing cabinets of the same height in modern fitted kitchens. The feet can be adjusted so that correct height is reached.
The laminated top of the machine does not require any particular care since it is heatproof, scratchproof and stainproof.

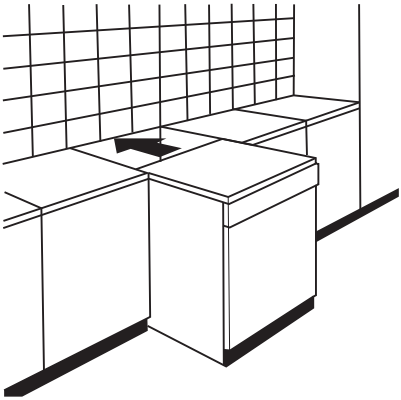

Underneath existing work top

(When fitting beneath a work top)
In most modern fitted kitchens there is only one single work top under which cabinets and electrical appliances are fitted. In this case remove the work top of the dishwasher by unscrewing the screws under the rear edge of the top (**a**).

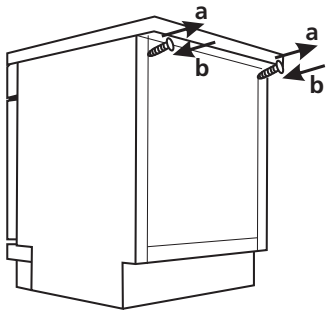

⚠ Attention

After removing the work top, the screws must be screwed again under the rear edge of the top (**b**).

The height will then be reduced to 815 mm, as scheduled by the International Regulations (ISO) and the dishwasher will fit perfectly under the kitchen working top

Built-In Installation(for the integrated model)

Step 1. Selecting the best location for the dishwasher

The installation position of dishwasher should be near the existing inlet and drain hoses and power cord.
Illustrations of cabinet dimensions and installation position of the dishwasher.

1. Less than 5 mm between the top of dishwasher and cabinet and the outer door aligned to cabinet.

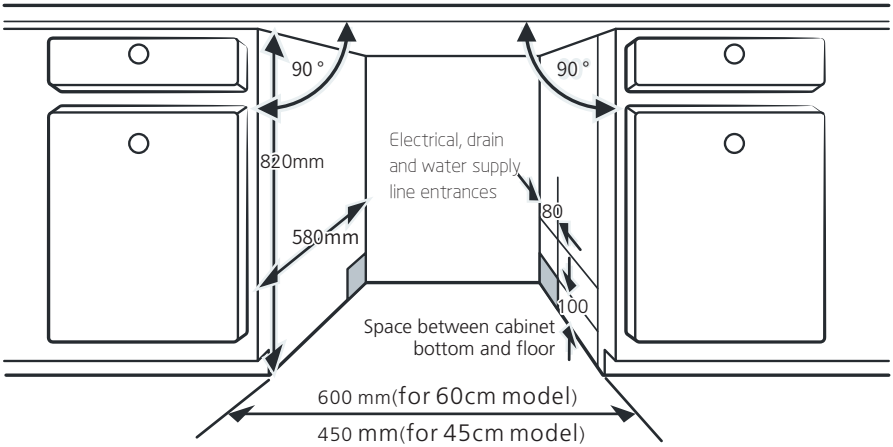

2. If dishwasher is in stalled at the corner of the cabinet, there should be some space when the door is opened.

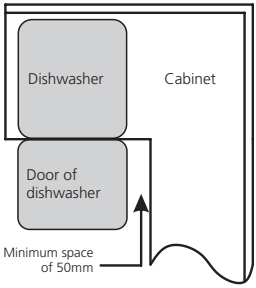

NOTE:

Depending on where your electrical outlet is, you may need to cut a hole in the opposite cabinet side.

Step 2. Aesthetic panel's dimensions and installation

The aesthetic wooden panel could be processed according to the installation drawings.

Semi-integrated model

Magical paster A and magical paster B be disjoinedon ,magical paster A on the aesthetic wooden panel and felted magical paster B of the outer door of dishwasher (see figure A). After positioning of the panel , fix the panel onto the outer door by screws and bolts (See figure B).

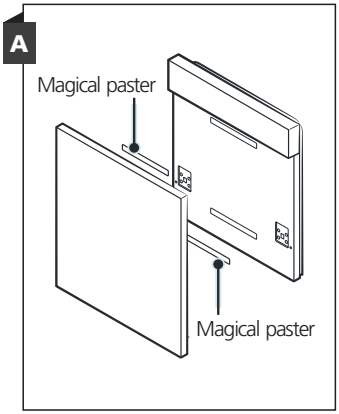

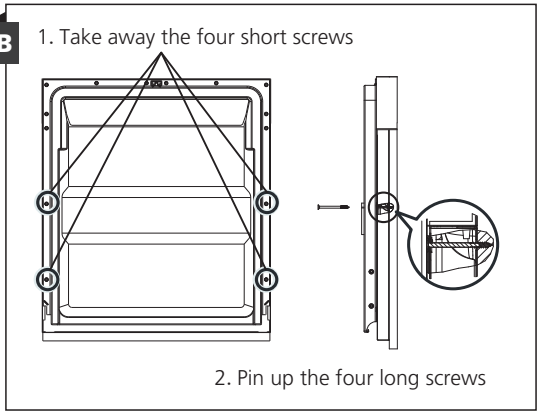

Full-integrated model

Install the hook on the aesthetic wooden panel and put the hook into the slot of the outer door of dishwasher (see figure A). After positioning of the panel , fix the panel onto the outer door by screws and bolts (See figure B).

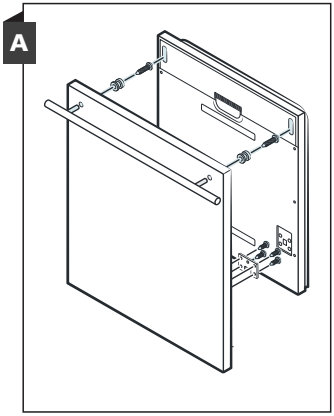

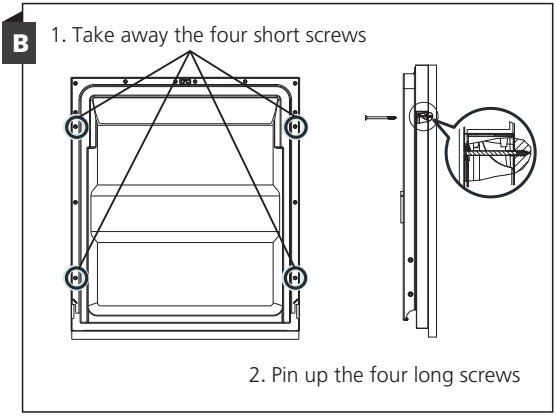

Step 3. Tension adjustment of the door spring

1. The door springs are set at the factory to the proper tension for the outer door. If aesthetic wooden panel are installed, you will have to adjust the door spring tension. Rotate the adjusting screw to drive the adjustor to strain or relax the steel cable.
2. Door spring tension is correct when the door remains horizontal in the fully opened position, yet rises to a close with the slight lift of a finger.

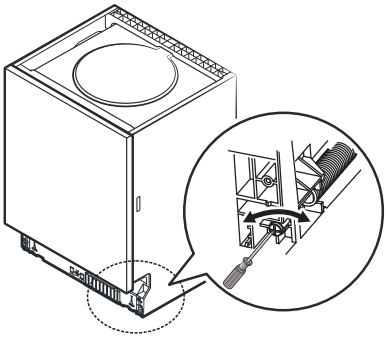

Step 4. Dishwasher installation steps

Please refer to the specified installation steps in the installation drawings.

1. Affix the condensation strip under the work surface of cabinet. Please ensure the condensation strip is flush with edge of work surface. (Step 2)
2. Connect the inlet hose to the cold water supply.
3. Connect the drain hose.
4. Connect the power cord.
5. Place the dishwasher into position. (Step 4)
6. Level the dishwasher. The rear foot can be adjusted from the front of the dishwasher by turning the Philips screw in the middle of the base of dishwasher use an Philips screw. To adjust the front feet, use a flat screw driver and turn the front feet until the dishwasher is level. (Step 5 to Step 6)
7. Install the furniture door to the outer door of the dishwasher. (Step 7 to Step 10)
8. Adjust the tension of the door springs by using an Allen key turning in a clockwise motion to tighten the left and right door springs. Failure to do this could cause damage to your dishwasher. (Step 11)
9. The dishwasher must be secured in place. There are two ways to do this:
   A. Normal work surface: Put the installation hook into the slot of the side plane and secure it to the work surface with the wood screws.
   B. Marble or granite work top: Fix the side with Screw.

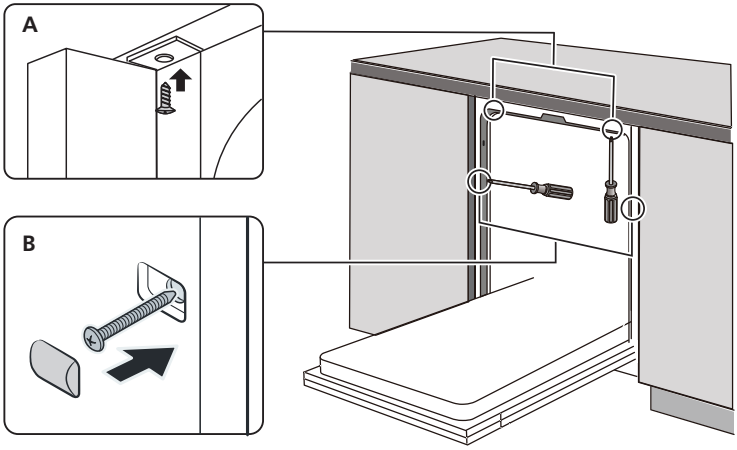

Step 5. Levelling the dishwasher

Dishwasher must be level for proper dish rack operation and wash performance.

1. Place a spirit level on door and rack track inside the tub as shown to check that the dishwasher is level.
2. Level the dishwasher by adjusting the three levelling legs individually.
3. When level the dishwasher, please pay attention not to let the dishwasher tip over.

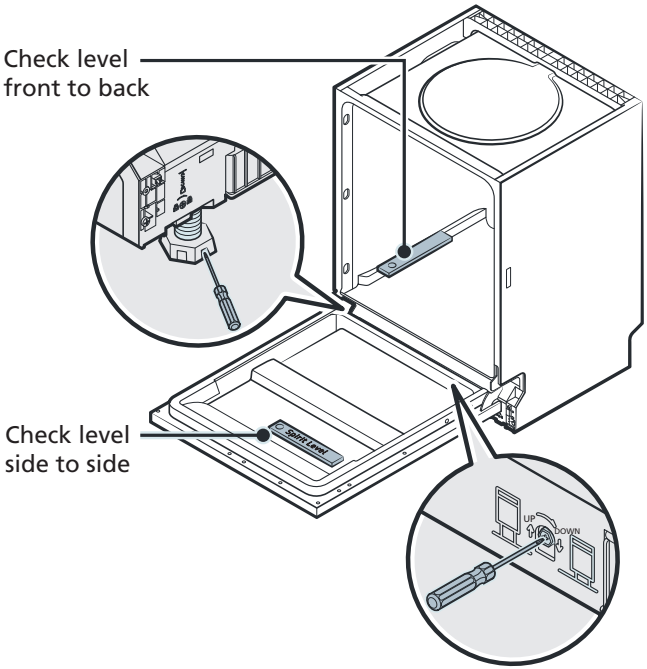

NOTE:

The maximum adjustment height of the feet is 50 mm.

TROUBLESHOOTING TIPS

Before Calling For Service

Reviewing the charts on the following pages may save you from calling for service.

Problem	Possible Causes	What To Do
Dishwasher doesn't start	Fuse blown, or the circuit break tripped.	Replace fuse or reset circuit breaker. Remove any other appliances sharing the same circuit with the dishwasher.
	Power supply is not turned on.	Make sure the dishwasher is turned on and the door is closed securely. Make sure the power cord is properly plugged into the wall socket.
	Water pressure is low	Check that the water supply is connected properly and the water is turned on.
	Door of dishwasher not properly closed.	Make sure to close the door properly and latch it.
Water not pumped form dishwasher	Twisted or trapped drain hose.	Check the drain hose.
	Filter clogged.	Check coarse the filter.
	Kitchen sink clogged.	Check the kitchen sink to make sure it is draining well. If the problem is the kitchen sink that is not draining , you may need a plumber rather than a serviceman for dishwashers.
Suds in the tub	Wrong detergent.	Use only the special dishwasher detergent to avoid suds. If this occurs, open the dishwasher and let suds evaporate. Add 1 gallon of cold water to the bottom of the dishwasher. Close the dishwasher door, then select any cycle. Initially, the dishwasher will drain out the water. Open the door after draining stage is complete and check if the suds have disappeared. Repeat if necessary.

Problem	Possible Causes	What To Do
	Spilled rinse-aid.	Always wipe up rinse-aid spills immediately.
Stained tub interior	Detergent with colourant may have been used.	Make sure that the detergent has no colourant.
White film on inside surface	Hard water minerals.	To clean the interior, use a damp sponge with dishwasher detergent and wear rubber gloves. Never use any other cleaner than dishwasher detergent otherwise, it may cause foaming or suds.
There are rust stains on cutlery	The affected items are not corrosion resistant.	Avoid washing items that are not corrosion resistant in the dishwasher.
	A program was not run after dishwasher salt was added. Traces of salt have gotten into the wash cycle.	Always run a wash program without any crockery after adding salt. Do not select the Turbo function (if present), after adding dishwasher salt.
	The lid of the softer is loose.	Check the softener lid is secure.
Knocking noise in the dishwasher	A spray arm is knocking against an item in a basket	Interrupt the program and rearrange the items which are obstructing the spray arm.
Rattling noise in the dishwasher	Items of crockery are loose in the dishwasher.	Interrupt the program and rearrange the items of crockery.
Knocking noise in the water pipes	This may be caused by on-site installation or the cross-section of the piping.	This has no influence on the dishwasher function. If in doubt, contact a qualified plumber.
The dishes are not clean	The dishes were not loaded correctly.	See PART II "Preparing And Loading Dishes".
	The program was not powerful enough.	Select a more intensive program.

Problem	Possible Causes	What To Do
The dishes are not clean.	Not enough detergent was dispensed.	Use more detergent, or change your detergent.
	Items are blocking the movement of the spray arms.	Rearrange the items so that the spray can rotate freely.
	The filter combination is not clean or is not correctly fitted in the base of wash cabinet. This may cause the spray arm jets to get blocked.	Clean and/or fit the filter correctly. Clean the spray arm jets.
Cloudiness on glassware.	Combination of soft water and too much detergent.	Use less detergent if you have soft water and select a shorter cycle to wash the glassware and to get them clean.
White spots appear on dishes and glasses.	Hard water area can cause limescale deposits.	Add more detergent.
Black or grey marks on dishes	Aluminium utensils have rubbed against dishes	Use a mild abrasive cleaner to eliminate those marks.
Detergent left in dispenser	Dishes block detergent dispenser	Re-loading the dishes properly.
The dishes aren't drying	Improper loading	Load the dishwasher as suggested in the directions.
	Dishes are removed too soon	Do not empty your dishwasher immediately after washing. Open the door slightly so that the steam can come out. Take out the dishes until the inside temperature is safe to touch. Unload the lower basket first to prevent the dropping water from the upper basket.

Problem	Possible Causes	What To Do
The dishes aren't drying	Wrong program has been selected.	With a short program, the washing temperature is lower, decreasing cleaning performance. Choose a program with a long washing time.
	Use of cutlery with a low-quality coating.	Water drainage is more difficult with these items. Cutlery or dishes of this type are not suitable for washing in the dishwasher.

LOADING THE BASKETS ACCORDING TO EN60436:

1.Upper basket:

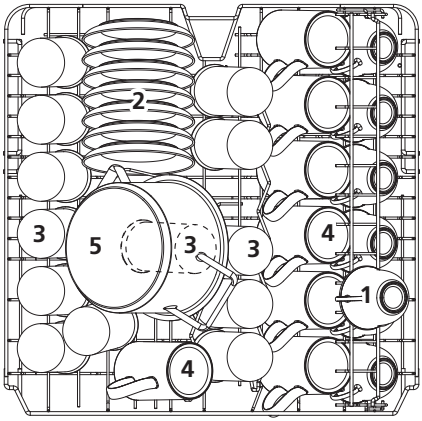

Number	Item
1	Cups
2	Saucers
3	Glasses
4	Mugs
5	Small pot

2.Lower basket:

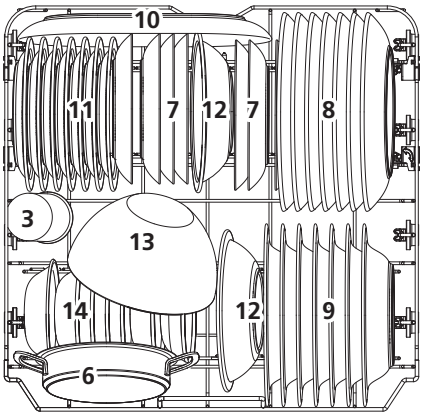

Number	Item
6	Oven pot
7	Dessert plates
8	Dinner plates
9	Soup plates
10	Oval platter
11	Melamine dessert plates
12	Melamine bowls
13	Glass bowl
14	Dessert bowls

3.Cutlery rack:

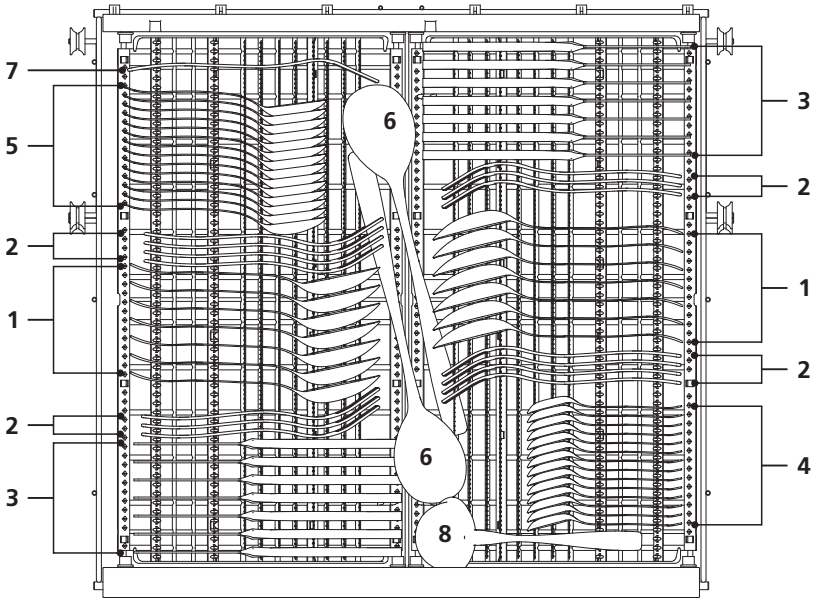

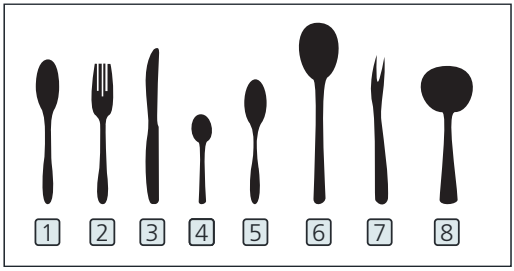

Number	Item
1	Soup spoons
2	Forks
3	Knives
4	Tea spoons
5	Dessert spoons
6	Serving spoons
7	Serving fork
8	Gravy ladle

Information for comparability
tests in accordance with EN60436
Capacity: 14 place settings
Position of the upper basket: lower position
Program: ECO
Rinse aid setting: Max
Softener setting: H3

Cutlery Rack Used Tips

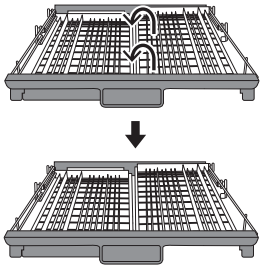

Lift the right basket up, both left and right baskets are flat.

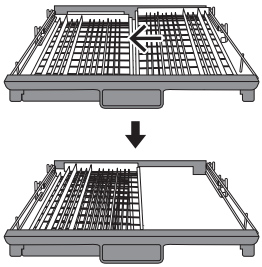

Move the right basket from right to left, two basket are overlapping.

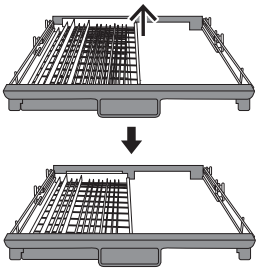

Remove the right basket from the tray, only has the left basket.

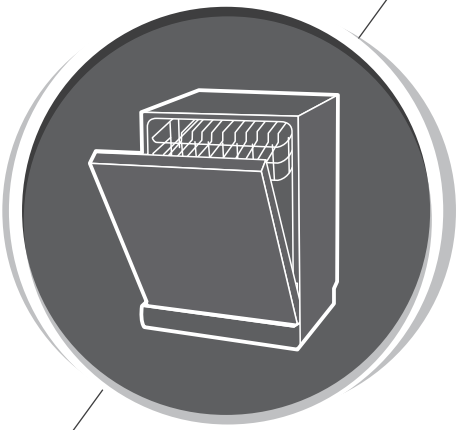

Dishwasher
Instruction Manual

PART II :Special Version

DW6083PRV

L6SJ5JG1XE.50

Please read this manual carefully
before using the dishwasher and
Keep this manual for future reference.

CONTENTS

01

4 **USING YOUR DISHWASHER**
4 Control Panel
7 Water Softener
8 Preparing And Loading Dishes
11 Function Of The Rinse Aid And Detergent
12 Filling The Rinse Aid Reservoir
13 Filling The Detergent Dispenser

02

14 **PROGRAMMING THE DISHWASHER**
14 Wash Cycle Table
18 Starting A Cycle Wash
18 Changing The Program Mid-cycle
19 Forget To Add A Dish?
19 Auto Open

03

18 **ERROR CODES**

04

19 **TECHNICAL INFORMATION**

NOTE:

- If you cannot solve the problems by yourself, please ask for help from a professional technician.
- The manufacturer, following a policy of constant development and updating of the product, may make modifications without giving prior notice.
- If lost or out-of-date, you can receive a new user manual from the manufacturer or responsible vendor.

QUICK USER GUIDE

Please read the corresponding content on the instruction manual for detailed operating method.

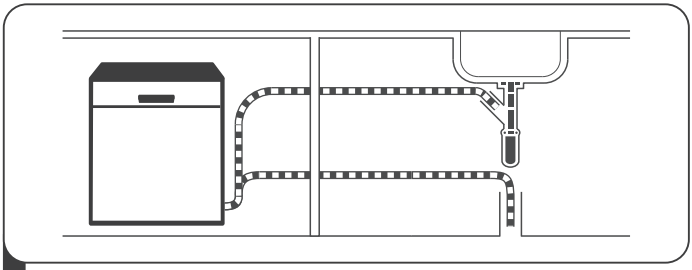

1 Install the dishwasher
(Please check the section 5 "INSTALLATION INSTRUCTION " of PART Ⅰ:Generic Version.)

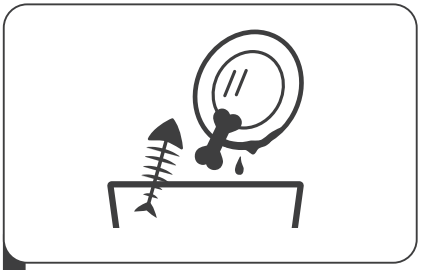

2 Removing the larger residue on the cutlery

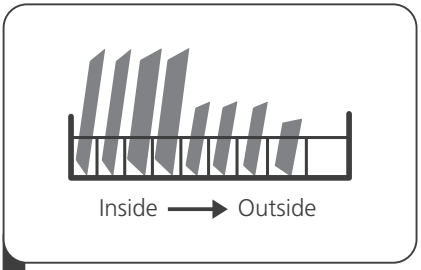

3 Loading the baskets

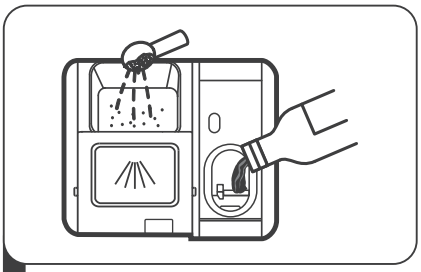

4 Filling the dispenser

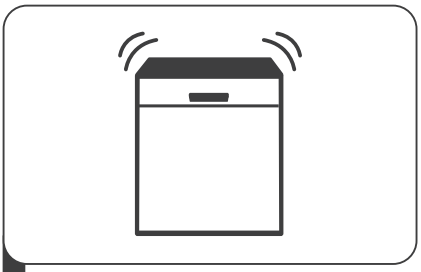

5 Selecting a program and running the dishwasher

USING YOUR DISHWASHER

Control Panel

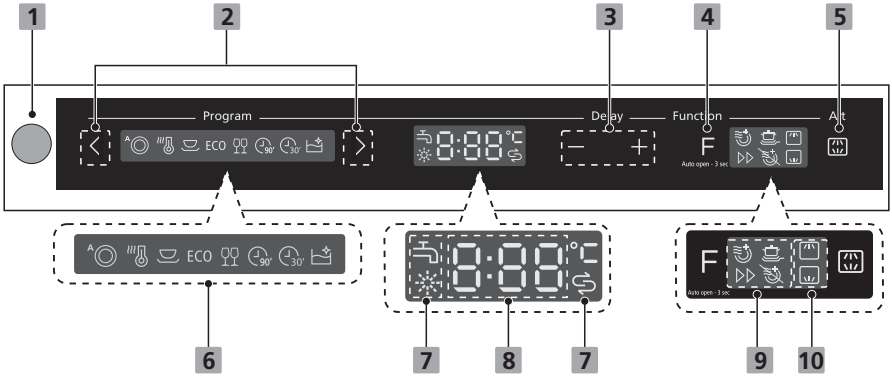

1	**Power**	Press the button to turn on your dishwasher,the screen lights up.
2	**Program**	Press the “ < ”or“ > ”button to select a program, and the corresponding indicator will be lit.
3	**Delay Start**	Press the “+”button to add the delay time or press the “-”button to decrease the delay time, maximum 24 hours delay can be defined.
4	**Function**	Press the button to select a function, corresponding indicator will be lit.
5	**Alt**	Press the button to select either upper basket or lower basket loaded, and the response indicators will be lit.

6	**Program indicator**	Daily Smart For lightly, normally or heavily soiled crockery with or without dried-on food. Intense With the sanitize option selected, the water temperature is increased to 70 ˚C for high temperature sanitization. Daily For normally soiled loads, such as pots, plates, glasses and lightly soiled pans. ECO This is standard program, it is suitable to clean normally soiled tableware and it is the most efficient program in terms of its combined energy and water consumption for that type of tableware. Delicate For lightly soiled crockery and glass. Daily Quick For normally soiled loads that need quick wash. Quick 30' For lightly soiled loads,such as glasses, crystal and fine china. Self Clean This program provides an effective cleaning of the dishwasher itself.
7	**Warning indicator**	Rinse Aid If the " " indicator is lit, it means the dishwasher is low on dishwasher rinse aid and requires a refill. Salt If the " " indicator is lit, it means the dishwasher is low on dishwasher salt and needs to be refilled. Water Faucet If the " indicator is lit, it means the water faucet closed.

8	**Screen**	To show the reminding time and delay time,error codes etc.
9	**Function indicator**	Extra Dry To dry dishes more completely. (It can only be used with Intense, Daily, ECO, Delicate, Daily Quick) Extra Clean To wash very dirty, hard to clean dishes. (It can only be used with Intense, Daily, ECO, Delicate, Daily Quick) Extra Fast Reduce the program time. (It can only be used with Intense, Daily, ECO, Delicate, Daily Quick) Auto open cancellation The dishwasher door opens automatically at the end of the program, which improves the drying results.When you pressing the function button for 3 seconds, the auto open door will be deactivate and the corresponding indicator will be lit.
10	**Alt indicator**	Upper When you select Upper, only the upper rack nozzle is activated.The lower nozzle will not operate. Lower When you select Lower, only the lower rack nozzle is activated. The upper nozzle will not operate.

Water Softener

The water softener must be set manually, using the water hardness dial.
The water softener is designed to remove minerals and salts from the water, which would have a detrimental or adverse effect on the operation of the appliance.
The more minerals there are, the harder your water is.
The softener should be adjusted according to the hardness of the water in your area.
Your local Water Authority can advise you on the hardness of the water in your area.

Adjusting salt consumption

The dishwasher is designed to allow for adjustment in the amount of salt consumed based on the hardness of the water used. This is intended to optimise and customise the level of salt consumption.

Please follow the steps below for adjustment in salt consumption.

1. Open the door and switch on the appliance;
2. Press the Program button " > " for more than 5 seconds to start the water softener set model within 60 seconds after the appliance was switched on;
3. Press the Program button " > " to select the proper set according to your local environment, the sets will change in the following sequence: H3->H4->H5->H6->H1->H2->H3;
4. Without operation in 5 seconds or press the Power button to complete the setup and exit the setup mode.

WATER HARDNESS				Water softener level	Salt consumption (gram/cycle)
German °dH	French °fH	British °Clarke	Mmol/l		
0 - 5	0 - 9	0 - 6	0 - 0.94	H1	0
6 - 11	10 - 20	7 - 14	1.0 - 2.0	H2	9
12 - 17	21 - 30	15 - 21	2.1 - 3.0	H3	12
18 - 22	31 - 40	22 - 28	3.1 - 4.0	H4	20
23 - 34	41 - 60	29 - 42	4.1 - 6.0	H5	30
35 - 55	61 - 98	43 - 69	6.1 - 9.8	H6	60

1°dH=1.25 °Clarke=1.78 °fH=0.178mmol/l
The manufactory setting: H3
Contact your local water board for information on the hardness of your water supply.

Please check the section 3 "Loading The Salt Into The Softener" of PART Ⅰ:Generic Version, If your dishwasher lacks salt.

NOTE:

If your model does not have any water softener, you may skip this section.

Water Softener

The hardness of the water varies from place to place. If hard water is used in the dishwasher, deposits will form on the dishes and utensils.

The appliance is equipped with a special softener that uses a salt container specifically designed to eliminate lime and minerals from the water.

Preparing And Loading Dishes

- Consider buying utensils which are identified as dishwasher-proof.
- For particular items, select a program with the lowest possible temperature.
- To prevent damage, do not take glass and cutlery out of the dishwasher immediately after the program has ended.

For washing the following cutlery/dishes

Are not suitable

- Cutlery with wooden, horn china or mother-of-pearl handles
- Plastic items that are not heat resistant
- Older cutlery with glued parts that are not temperature resistant
- Bonded cutlery items or dishes
- Pewter or cooper items
- Crystal glass
- Steel items subject to rusting
- Wooden platters
- Items made from synthetic fibres

Are of limited suitability

- Some types of glasses can become dull after a large number of washes
- Silver and aluminum parts have a tendency to discolour during washing
- Glazed patterns may fade if machine washed frequently

Recommendations for loading the dishwasher

Scrape off any large amounts of leftover food. Soften remnants of burnt food in pans. It is not necessary to rinse the dishes under running water.

For best performance of the dishwasher, follow these loading guidelines.

(Features and appearance of baskets and cutlery baskets may vary from your model.)

Place objects in the dishwasher in following way:

- Items such as cups, glasses, pots/pans, etc. are faced downwards.
- Curved items, or ones with recesses, should be loaded aslant so that water can run off.
- All utensils are stacked securely and can not tip over.
- All utensils are placed in the way that the spray arms can rotate freely during washing.
- Load hollow items such as cups, glasses, pans etc. With the opening facing downwards so that water cannot collect in the container or a deep base.
- Dishes and items of cutlery must not lie inside one another, or cover each other.
- To avoid damage, glasses should not touch one another.
- The upper basket is designed to hold more delicate and lighter dishware such as glasses, coffee and tea cups.
- Long bladed knives stored in an upright position are a potential hazard!
- Long and / or sharp items of cutlery such as carving knives must be positioned horizontally in the upper basket.
- Please do not overload your dishwasher. This is important for good results and for reasonable consumption of energy.

NOTE:

Very small items should not be washed in the dishwasher as they could easily fall out of the basket.

Removing the dishes

To prevent water dripping from the upper basket into the lower basket, we recommend that you empty the lower basket first, followed by the upper basket.

⚠ WARNING

Items will be hot! To prevent damage, do not take glass and cutlery out of the dishwasher for around 15 minutes after the program has ended.

Loading the upper basket

The upper basket is designed to hold more delicate and lighter dishware such as glasses, coffee and tea cups and saucers, as well as plates, small bowls and shallow pans (as long as they are not too dirty).Position the dishes and cookware so that they will not get moved by the spray of water.

Loading the lower basket

We suggest that you place large items and the most difficult to clean items are to be placed into the lower basket: such as pots, pans, lids, serving dishes and bowls, as shown in the figure below. It is preferable to place serving dishes and lids on the side of the racks in order to avoid blocking the rotation of the top spray arm.
The maximum diameter advised for plates in front of the detergent dispenser is of 19 cm, this not to hamper the opening of it.

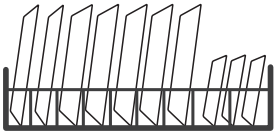

Loading the cutlery basket

Cutlery should be placed in the cutlery rack separatelyfrom each other in the appropriate positions, and do make sure the utensils do not nest together, this may cause bad performance.

⚠ WARNING

Do not let any item extend through the bottom.
Always load sharp utensils with the sharp point down!

For the best washing effect, please load the baskets refer to standard loading options on last section of PART Ⅰ: Generic Version

Function Of The Rinse Aid And Detergent

The rinse aid is released during the final rinse to prevent water from forming droplets on your dishes, which can leave spots and streaks. It also improves drying by allowing water to roll off the dishes. Your dishwasher is designed to use liquid rinse aids.

⚠ WARNING

Only use branded rinse aid for dishwasher. Never fill the rinse aid dispenser with any other substances (e.g. Dishwasher cleaning agent, liquid detergent). This would damage the appliance.

When to refill the rinse aid

The regularity of the dispenser needing to be refilled depends on how often dishes are washed and the rinse aid setting used.

- The Low Rinse Aid indicator ( ) will be lit when more rinse aid is needed.
- Do not overfill the rinse aid dispenser.

Function of detergent

The chemical ingredients that compose the detergent are necessary to remove, crush and dispense all dirt out of the dishwasher. Most of the commercial quality detergents are suitable for this purpose.

⚠ WARNING

- Proper Use of Detergent
  Use only detergent specifically made for dishwashers use. Keep your detergent fresh and dry.
  Don't put powdered detergent into the dispenser until you are ready to wash dishes.
-
  Dishwasher detergent is corrosive!Keep dishwasher detergent out of the reach of children.

Filling The Rinse Aid Reservoir

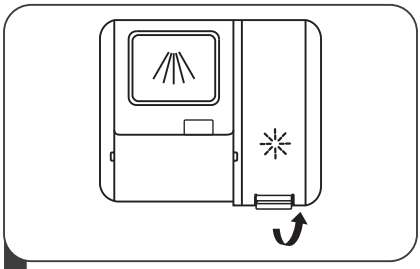

1 Remove the rinse reservoir cap by lifting up the handle .

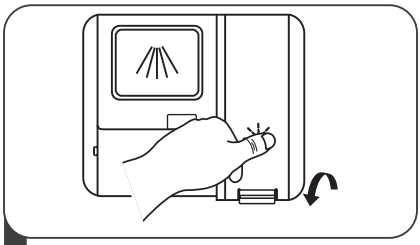

3 Close the cap after all.

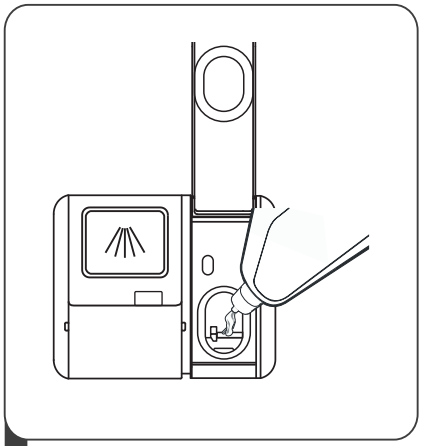

2 Pour the rinse aid into the dispenser, being careful not to overfill.

Adjusting the rinse aid reservoir

To achieve a better drying performance with limited rinse aid, the dishwasher is designed to adjust the consumption by user. Follow the below steps.

1. Open the door and switch on the appliance.
2. Within 60 seconds after step 1, press the Program button “>”more than 5 seconds, and then press the Delay button “+” to enter the set model, the rinse aid indication blinks as 1Hz frequency.
3. Press the Program button “>” to select the proper set according to your using habits, the sets will change in the following sequence: d3->d4->d5->d1->d2->d3.
   The higher the number, the more rinse aid the dishwasher uses.
4. Without operation in 5 seconds or press the Power button to complete the setup and exit the setup mode.

Filling The Detergent Dispenser

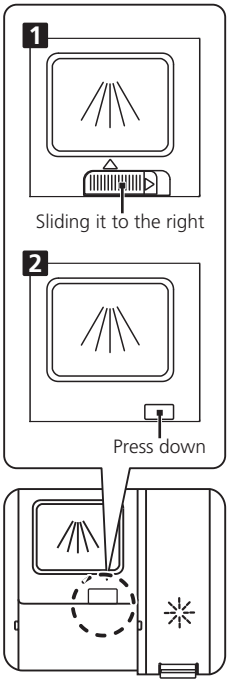

1 Please choose an open way according to the actual situation.

1. Open the cap by sliding the release catch.
2. Open the cap by pressing down the release catch.

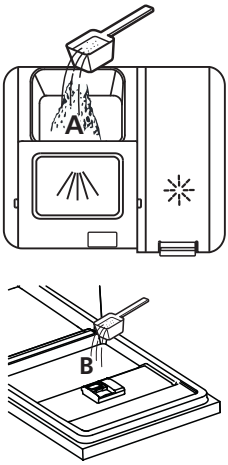

2 Add detergent into the larger cavity (A) for the main wash cycle .
For better cleaning result, especially if you have very dirt items, pour a small amount of detergent onto the door. The additional detergent will activate during the pre-wash phase.

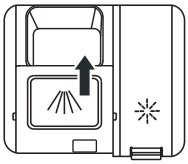

3 Close the flap by sliding it to the front and then pressing it down.

NOTE:

- Be aware that depending on the soiling of water, setting may be different.
- Please observe the manufacturer's recommendations on the detergent packaging.

PROGRAMMING THE DISHWASHER

Wash Cycle Table

The table below shows which programs are best for the levels of food residue on them and how much detergent is needed. It also show various information about the programs.

(●)Means: need to fill rinse into the Rinse-Aid Dispenser.

Program	Description Of Cycle	Detergent Pre/Main	Running Time(min)	Energy (kWh)	Water (L)	Rinse Aid
A Daily Smart	Pre-wash(45℃) AutoWash (55-65℃) Rinse Rinse(50–55℃) Drying	4/18g (1 or 2 pieces)	85-150	0.850-1.550	8.5-18.0	●
Intense	Wash(70℃) Rinse Rinse Rinse(70℃) Drying	22g (1 or 2 piece)	200	1.500	13.5	●
Daily	Pre-wash(45℃) Wash(55℃) Rinse Rinse(55℃) Drying	4/18g (1 or 2 pieces)	175	0.980	13.6	●
ECO (*EN60436)	Pre-wash Wash(50℃) Rinse Rinse(45℃) Drying	4/18g (1 or 2 pieces)	230	0.747	9.8	●
Delicate	Pre-wash Wash(50℃) Rinse(50℃) Rinse(50℃) Drying	4/18g (1 piece)	120	0.950	13.5	●

Program	Description Of Cycle	Detergent Pre/Main	Running Time(min)	Energy (kWh)	Water (L)	Rinse Aid
90' Daily Quick	Wash(60℃) Rinse Rinse(50℃) Drying	22g (1 piece)	90	1.180	12.5	●
30' Quick 30'	Wash(35℃) Rinse(35℃)	12g (1 piece)	20	0.410	11.2	○
Self-Clean	Prewash Wash(60℃) Rinse Rinse(60℃) Drying	4/18g (1 piece)	145	1.250	14.9	●

NOTE:

ECO (*EN60436) : This program is the test cycle. The information for comparability test in accordance with EN60436.

Starting A Cycle Wash

1. Draw out the lower and upper basket, load the dishes and push them back. It is commended to load the lower basket first, then the upper one.
2. Pour in the detergent.
3. Insert the plug into the socket. The power supply refer to last page"Product fiche". Make sure that the water supply is turned on to full pressure.
4. Open the door, Press the power button.
5. Press the Program " < " button or " > " button to choose a program, the response light will turn on. Then close the door, the dishwasher will start its cycle.

Changing The Program Mid-cycle

A wash cycle can only be changed if it has been running for a short time otherwise, the detergent may have already been released and the dishwasher may have already drained the wash water. If this is the case, the dishwasher needs to be reset and the detergent dispenser must be refilled. To reset the dishwasher, follow the instructions below:

1. Open the door a little to stop the dishwasher, after the spray arm stop working, you can open the door completely.
2. Press Program " > " button more than three seconds the machine will be in stand by state.
3. You can change the program to the desired cycle setting.

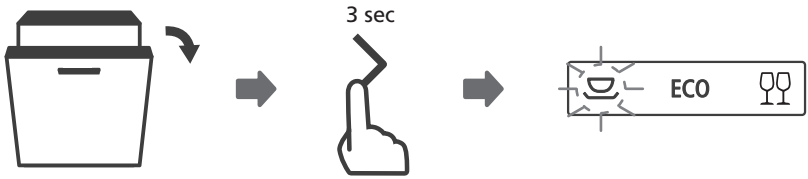

Forget To Add A Dish?

A forgotten dish can be added any time before the detergent dispenser opens. If this is the case, follow the instructions below:

1. Open the door a little to stop the washing.
2. After the spray arms stop working, you can open the door completely.
3. Add the forgotten dishes.
4. Close the door. The dishwasher will start after 10 seconds.

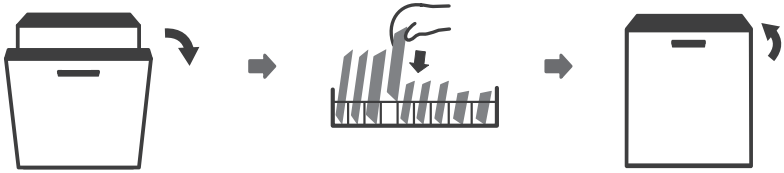

⚠ WARNING

It is dangerous to open the door mid-cycle, as hot steam may scald you.

Auto Open

After washing, the door will open automatically to achieve better drying effect.

NOTE:

The dishwasher door must not be blocked when set to open automatically.
This can disrupt door lock functionality.
The party program don’t have the Auto open function.

ERROR CODES

If there is a malfunction, the dishwasher will display error codes to identify these:

Codes	Meanings	Possible Causes
E1	Longer inlet time.	Faucets is not opened, or water intake is restricted,or water pressure is too low.
E3	Not reaching required temperature.	Malfunction of heating element .
E4	Overflow.	Some element of dishwasher leaks .
E8	Failure of orientation of distributary valve.	Open circuit or break of distributary valve.
EC	Washing control system fail.	PCB or motor fail.
Ed	Failure of communication between main PCB with display pcb.	Open circuit or break wiring for the communication.

⚠ WARNING

- If overflow occurs, turn off the main water supply before calling a service.
- If there is water in the base pan because of an overfill or small leak, the water should be removed before restarting the dishwasher.

TECHNICAL INFORMATION

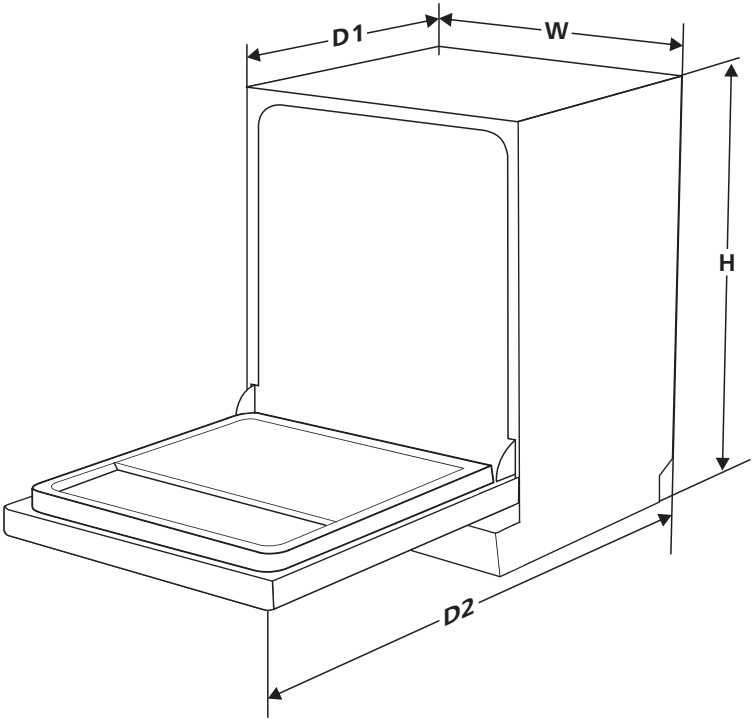

Height (H)	815mm
Width (W)	598mm
Depth (D1)	550mm (with the door closed)
Depth (D2)	1150mm (with the door opened 90°)

Product information sheet

Supplier's name or trade mark: BERTAZZONI

Model identifier: L6SJ5JG1XE.50

General product parameters:

Parameter	Value	Parameter	Value	
Rated capacity ([a]) (ps)	14	Dimensions in cm	Height	82
			Width	60
			Depth	55
EEI ([a])	43,9	Energy efficiency class ([a])	C([c])	
Cleaning performance index ([a])	1,125	Drying performance index ([a])	1,065	
Energy consumption in kWh [per cycle], based on the eco programme using cold water fill. Actual energy consumption will depend on how the appliance is used.	0,747	Water consumption in litres [per cycle], based on the eco program. Actual water consumption will depend on how the appliance is used and on the hardness of the water.	9,8	
Program duration ([a]) (h:min)	3:50	Type	built-in	
Airborne acoustical noise emissions ([a]) (dB(A) re 1 pW)	42	Airborne acoustical noise emission class ([a])	B ([c])	
Off-mode (W)	0,49	Standby mode (W)	N/A	
Delay start (W) (if applicable)	1,00	Networked standby (W) (if applicable)	N/A	

Minimum duration of the guarantee offered by the supplier ([b]):

Additional information:

Weblink to the supplier's website, where the information in point 6 of Annex II to Commission Regulation (EU) 2019/2022 ([1]) ([b]) is found:

([a]) for the eco program.
([b]) changes to these items shall not be considered relevant for the purposes of paragraph 4 of Article 4 of Regulation (EU) 2017/1369.
([c]) if the product database automatically generates the definitive content of this cell the supplier shall not enter these data.

([1]) Commission Regulation (EU) 2019/2022 of 1 October 2019 laying down eco design requirements for household dishwashers pursuant to Directive 2009/125/EC of the European Parliament and of the Council amending Commission Regulation (EC) No 1275/2008 and repealing Commission Regulation (EU) No 1016/2010 (see page 267 of this Official Journal).